APPARTAMENTO

Espresso Machine

Spare Parts Catalogue

Ed.04.2021

© Rocket Espresso Ltd. - APPARTAMENTO Espresso Machine. Spare Parts Catalogue. Ed. 04.2021. Subject to change without notice.

BODYWORK

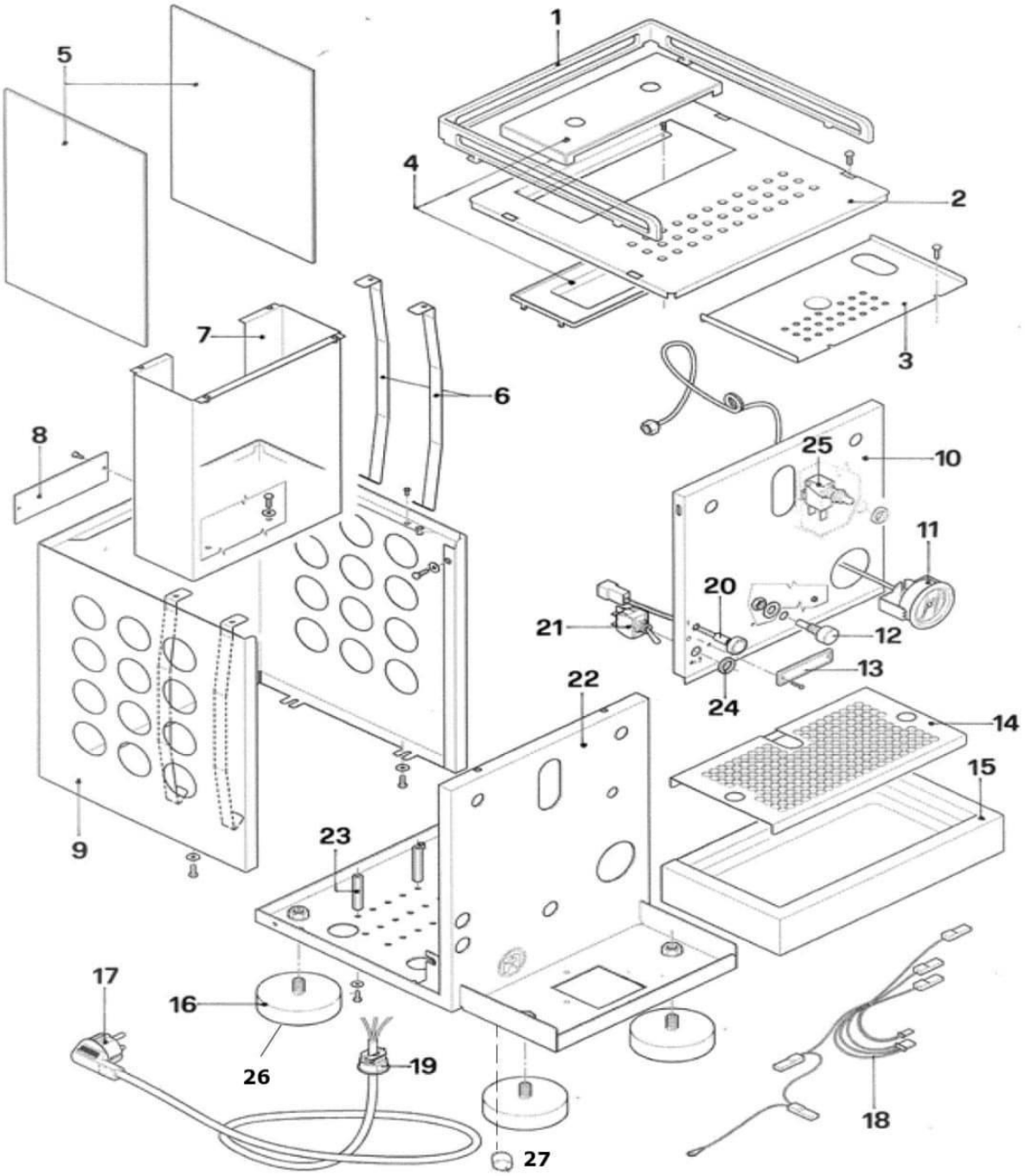

© Rocket Espresso Ltd. - APPARTAMENTO Espresso Machine. Spare Parts Catalogue. Ed. 04.2021. Subject to change without notice.

BODYWORK

os.	#	Description	Notes
1	RA9BV06129	Stainless steel Cups frame black	
1	A639905639	Plastic Cups Tray	
2	A019905631	Cups tray	
3	A019905636	Boiler cover plate	
4	R01L000382	Tank cover	
5	A639905747	Opal white side panel	
	A619905749	Side panel with copper finishing	
6	A019905732	Side panel fixing bracket	
7	A019904656	Tank guide	
8	A859904400	Rear tag	
9	A019905629	Bodywork panel	
	A01B965629	Black Bodywork panel	
10	A01I005632	Front panel	
11	A299905785	Boiler pressure gauge	
12	A227704363	Expansion connector	
13	A859905733	Front tag	
14	A019905633	Grid	
15	A01L005630	Drain tray	
16	A059905755	Foot	
17	C199900957	Power cord CE	
	A199904518	Power cord Israel	
	A199904616	Power cord Korea	
	C199900958	Power cord UL	
	C199901115	Power cord AUS/NZ	
	C199901116	Power cord GB	
	C199901510	Power cord CH	
18	A199906562	Wiring loom	Only From S/N D1902
19	C439900086	Cable retainer	
20	A199905886	Green control lamp machine on/off	
21	A199906002	On/Off switch	
22	A009905628	Basement	
23	A529905637	Tank guide fixings	
24	A527704305	Ring nut	
25	A199905198	Microswitch	
26	R849906343	OR for foot	
27	M199905452	ECO mode Switch Appartamento	From S/N D2008

HYDRAULIC PARTS / PUMP AREA

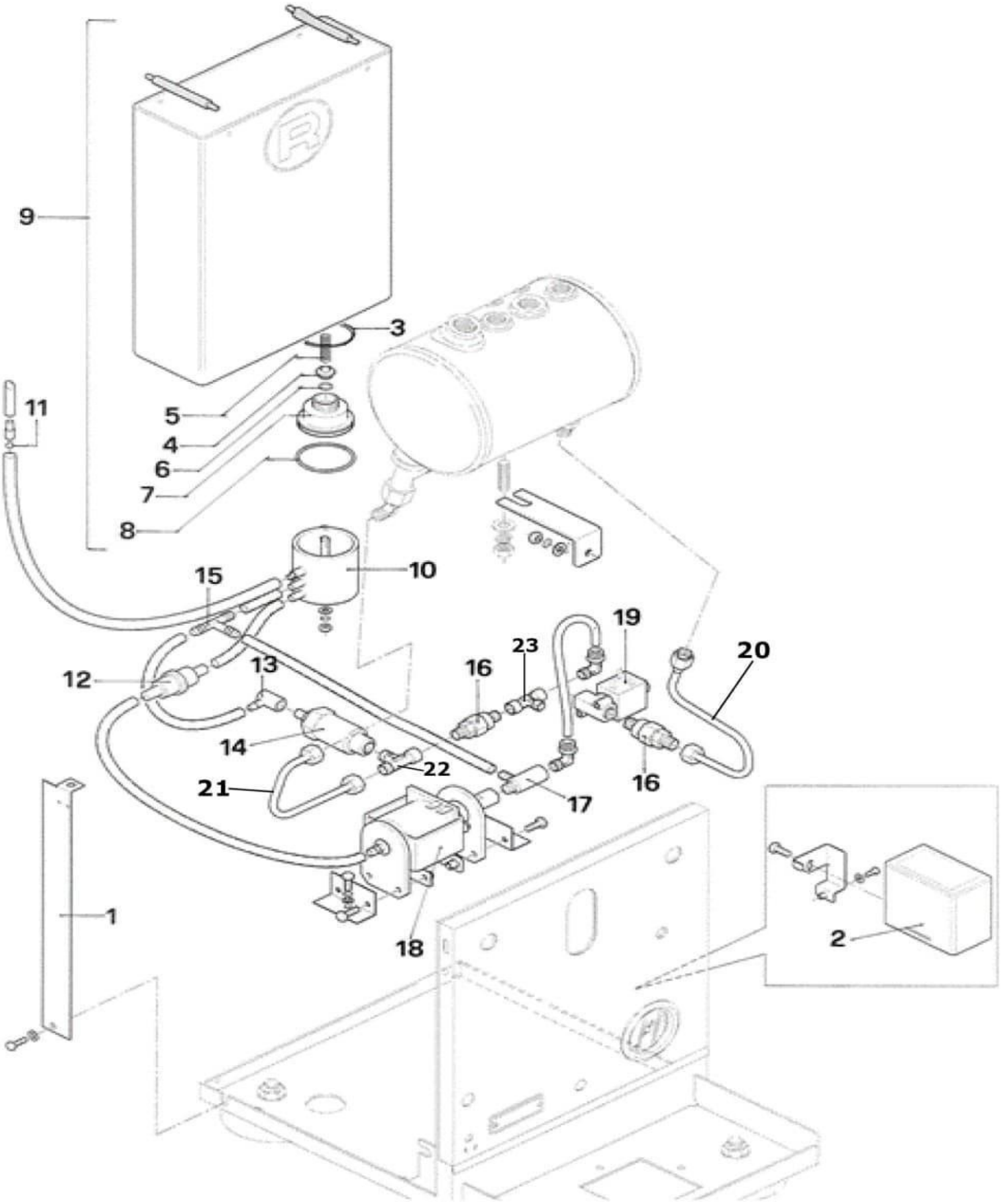

© Rocket Espresso Ltd. - APPARTAMENTO Espresso Machine. Spare Parts Catalogue. Ed. 04.2021. Subject to change without notice.

HYDRAULIC PARTS / PUMP AREA

Pos.	#	Description	Notes
1	A019905635	Support	
2	A199907379	Control board V.240	AU,NZ
	A199906656	Control board V. 230	From S/N D1915
	A199906657	Control board V. 115	From S/N D1915
	A190004524	Control board V. 230 (previous model)	To S/N D1915
	A190004525	Control board V. 115 (previous model)	To S/N D1915
3	A449905151	O-Ring	
4	C430003482	Tank connector	
5	C019900711	Spring	
6	C449900702	O-Ring	
7	A439905146	Coupling	
8	A449904547	O-Ring	
9	R899905145	Water tank (complete)	
10	R839905147	Manifold	
11	C430003819	Sphere	
12	C439900695	Filter	
13	C449900709	Rubber connector	
14	C229900911	Expansion valve	
15	C400002827	Rubber T-Connector	
16	C229900540	Non return valve	
17	C200002112	S2 valve	
18	C199900280	Vibration pump V. 230	
	C199900281	Vibration pump V. 115	
19	C190004066	Solenoid valve V. 230	
	C190004067	Solenoid valve V. 115	
20	C229900400	Fill boiler pipe	
21	C229900399	Feeding pipe exchanger	
22	C229900644	T-Joint 1/8 M/M F	
23	C229900703	T-Joint 1/8 F/M F	

HYDRAULIC PARTS / BOILER AREA

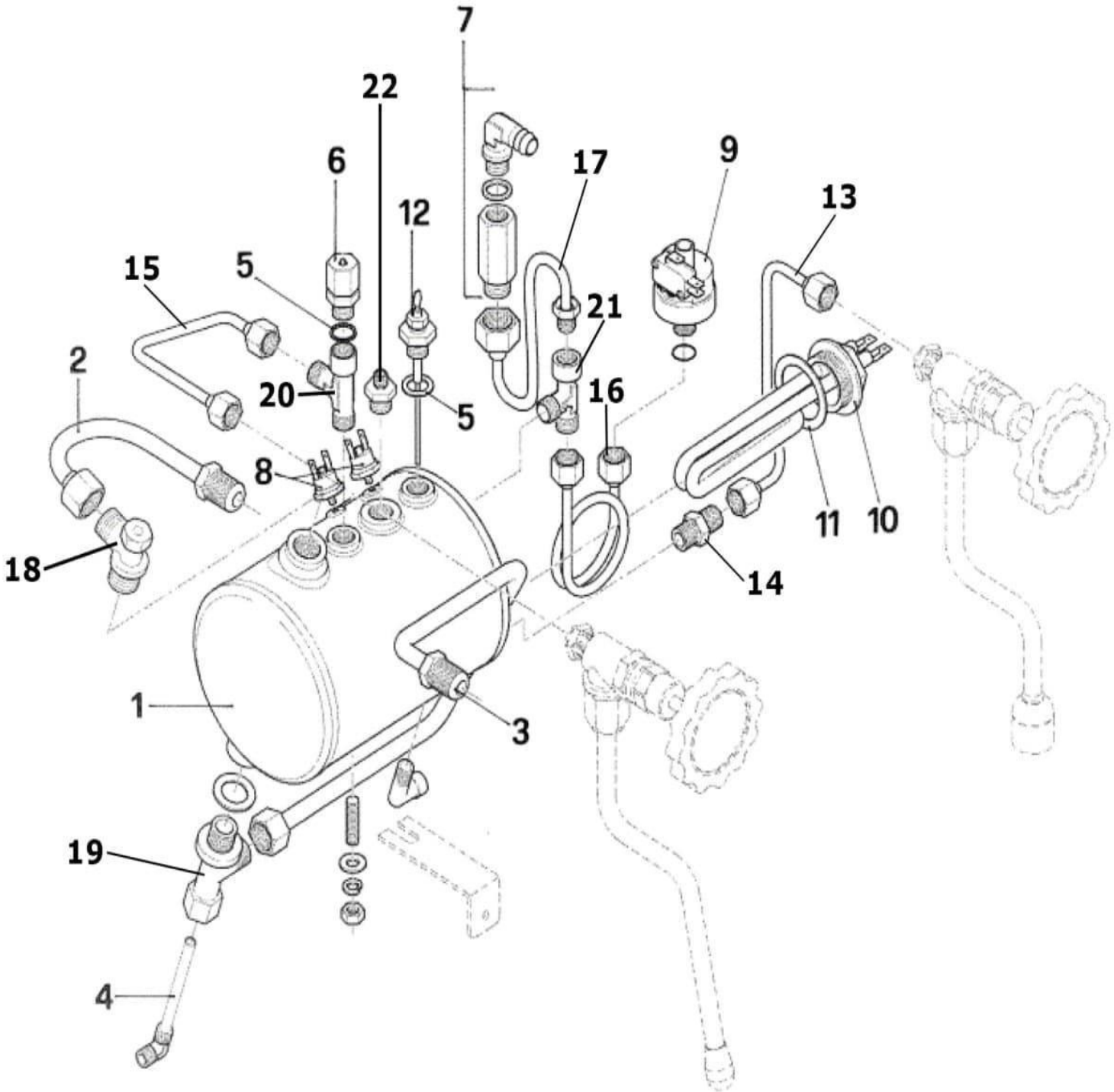

© Rocket Espresso Ltd. - APPARTAMENTO Espresso Machine. Spare Parts Catalogue. Ed. 04.2021. Subject to change without notice.

HYDRAULIC PARTS / BOILER AREA

Pos.	#	Description	Notes
1	A27NSF5638	Boiler	
2	A279905817	Pipe from boiler to group	
3	A279904289	Thermosiphonical return pipe	
4	C229900393	Injector	
5	A269904417	Teflon gasket 1/4"	
6	A219905510	Vacuum breaker valve	
7	A299904998	Safety valve	
8	C199901550	Safety Thermostat	
9	C199900294	Pressure switch	AU, USA,NZ,ISR
	A199906971	Pressure switch	ALL OTHERS
10	C199901551	Heating element V. 230	
10	C199901552	Heating element V. 115	
11	C469900239	Heating element gasket	
12	C199900839	Boiler level probe	
13	A229905097	Water pipe TeaB	
14	C229900520	Nipples	
15	A279906087	Steam Pipe TeaB	
16	A279904292	Pressurestat Pipe	
17	A279905786	Security Valve Pipe	
18	A229904957	Inlet connector	
19	C229900740	Lower thermosiphonical pipe	
20	A229905820	T-Joint 1/4 M/M F with Seal Seat	
21	C229900528	T-Joint 1/4 M/M F	

STEAM & HOT WATER VALVE ASSEMBLY

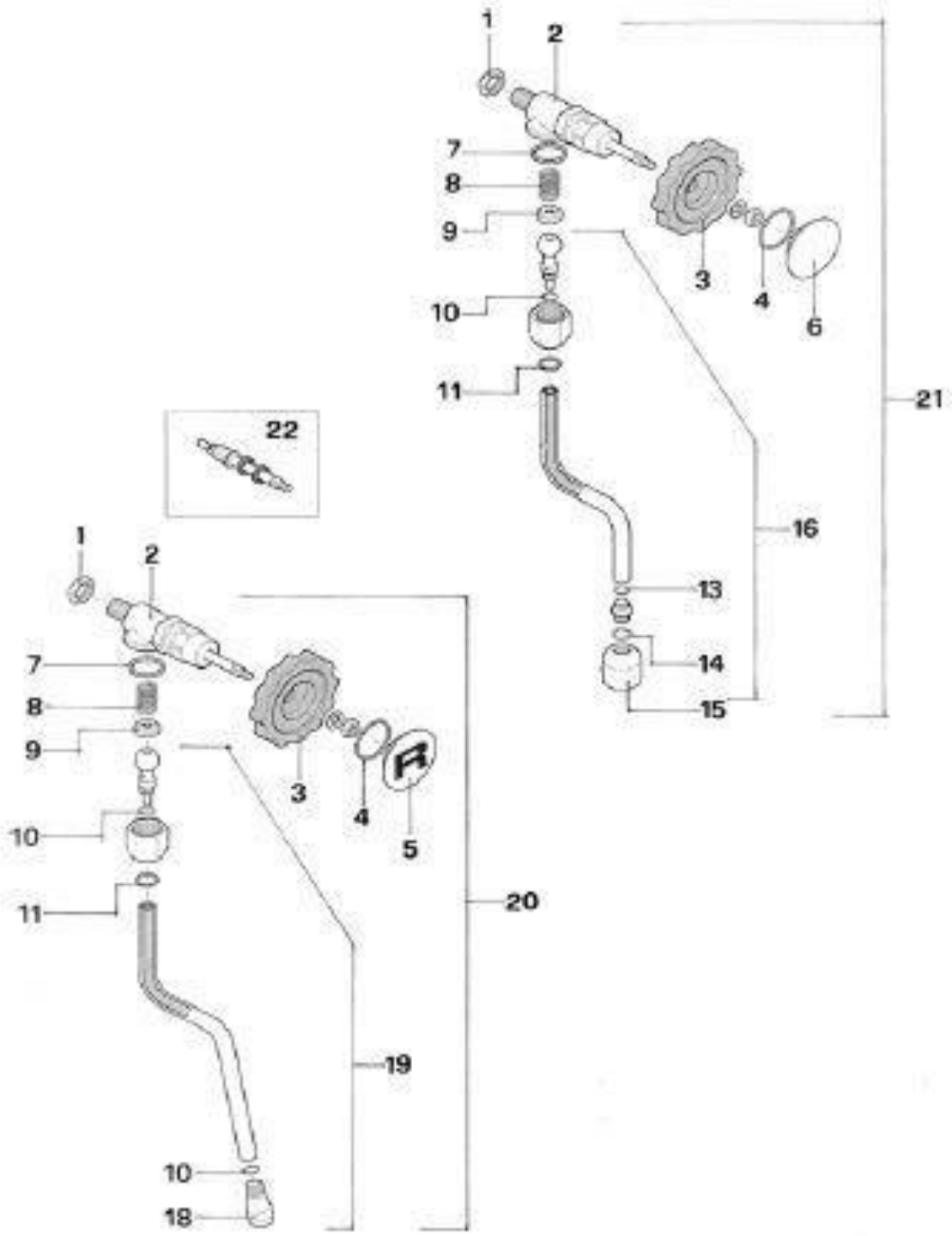

STEAM & HOT WATER VALVE ASSEMBLY

Pos.	#	Description	Notes
1	A329905087	Nut 1/4"	
2	A229905784	Hot Water Steam Pipe	
3	A639905816	Handle	
4	A449904672	O-Ring	
5	A529R04649	"R" cover for steam valve handle	
6	A527704649	Cover for hot water handle	
7	A449904331	Teflon gasket	
8	A209904332	Spring	
9	A229904333	Plate	
10	C400002022	O-Ring	
11	A449904334	O-Ring	
13	C400002022	O-Ring	
14	C400003008	O-Ring	
15	C227700536	Hot water nozzle	
16	R290003612	Hot water wand (complete)	
18	C200002839	Steam nozzle 2 holes 1,5	
19	R290003611	Steam wand (complete)	
20	R299906015	Steam wand with valve	
21	R299906016	Hot water wand with valve	
22	R229905953	Shaft	

Brewing Head ("Group")

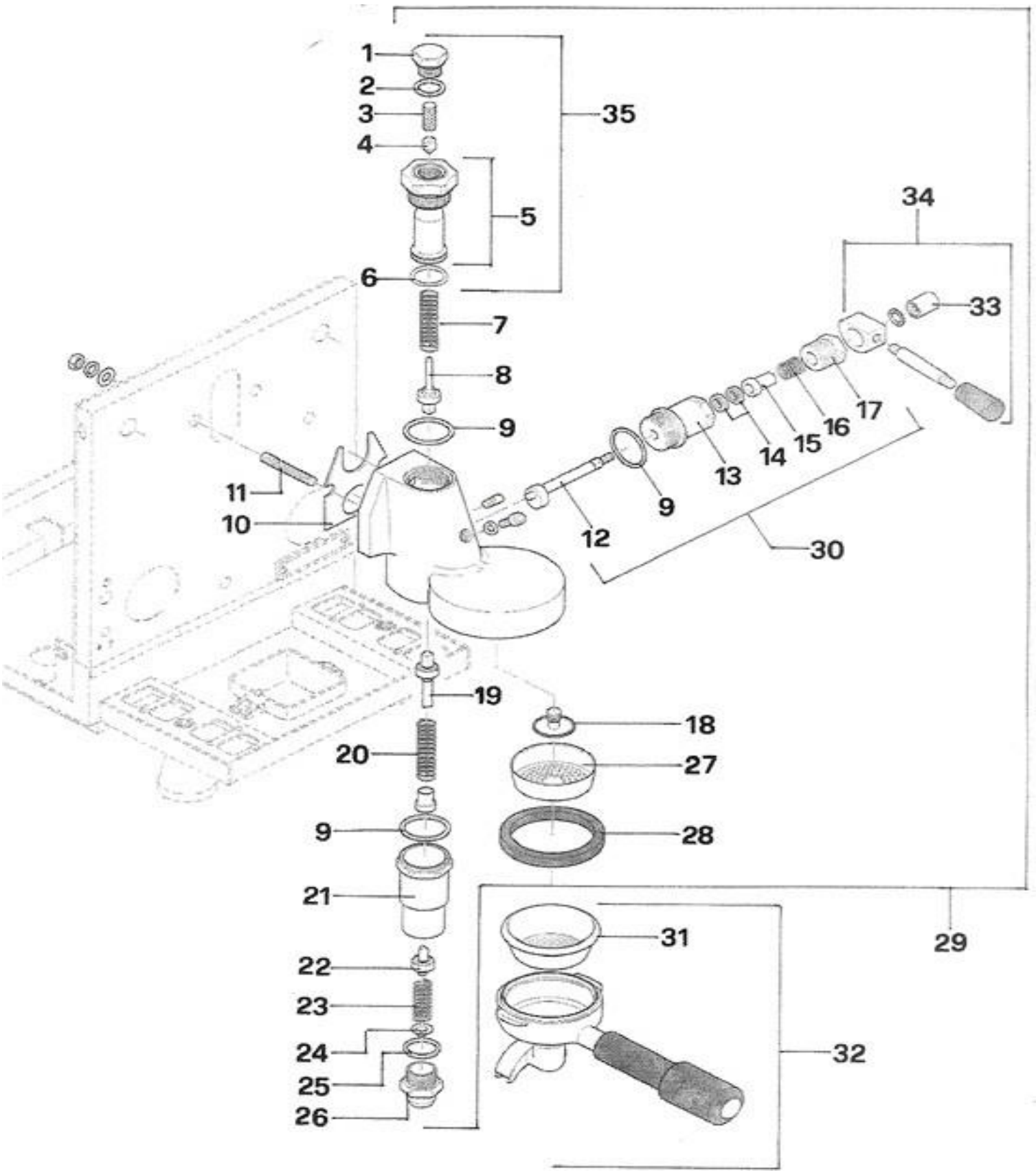

Brewing Head ("Group")

Pos.	#	Description	Notes
1	A229904391	Rounded nut	
2	C469900420	Gasket	
3	C619900554	Filter	
4	C229900549	Gigleur 0.8	
5	R299906767	Replacement Ceramic Shaft	
6	C469900422	Green gasket	
7	A999905754	Spring	
8	R229905608	Valve	
9	C469900421	Teflon gasket	
10	C449900767	Gasket	
11	A319904599	Screw	
12	R229905238	Shaft	
13	R000002142	Flange	
14	C219900426	Gasket	
15	R000002143	Support	
16	C219900427	Spring	
17	R000002144	Cam Housing	
18	C229901228	Diffuser	
19	R229905239	Valve	
20	A999905754	Spring	
21	C229901165	Cylinder	
22	R229905609	Valve	
23	R299905958	Spring	
24	R000002148	Connector	
25	C469900783	Gasket	
26	R000002149	Connector	
27	C519900103	Shower foil	
28	C449900229	Group gasket	
29	C200002983	Group complete	
30	R299905887	Cam kit	
31	C610003902	7 g filter basket	
	C610003901	14 g filterbasket	
	C619900106	Backflush cap ("blind filter")	
32	A699905020	1 cup filter holder with basket	
	A699905021	2 cups filter holòder with basket	
33	R000002146	Pin	
34	R299905888	Lever assembly	
35	RA99905814	Ceramic group shaft	Final Price

CONTROL BOARD TABLE

MACHINE SERIAL NUMBER	MODEL	USE CONTROL BOARD		VERSION USA
EARLY VERSIONS	GIOTTO	A190004275	PRE GREEN PLUG VERSION	
EARLY VERSIONS	CELLINI	A190004275	PRE GREEN PLUG VERSION	
	GIOTTO TYPE V	A190004524		A190004525
	MOZZAFIATO TYPE V	A190004524		A190004525
	GIOTTO EVOLUZIONE R	A190004524		A190004525
	MOZZAFIATO EVOLUZIONE R	A190004524		A190004525
FROM D1915...	GIOTTO CRONOMETRO V	A199906656		A199906657
FROM D1915...	MOZZAFIATO CRONOMETRO V	A199906656		A199906657
	GIOTTO CRONOMETRO V	NON ECO MODE	REMOVE BRIDGE FROM CONTROL BOARD A199906656	A199906657
	MOZZAFIATO CRONOMETRO V	NON ECO MODE	REMOVE BRIDGE FROM CONTROL BOARD A199906656	A199906657
FROM D1915...	GIOTTO CRONOMETRO R	A199906656		A199906657
FROM D1915...	MOZZAFIATO CRONOMETRO R	A199906656		A199906657
	GIOTTO CRONOMETRO R	NON ECO MODE	REMOVE BRIDGE FROM CONTROL BOARD A199906656	A199906657
	MOZZAFIATO CRONOMETRO R	NON ECO MODE	REMOVE BRIDGE FROM CONTROL BOARD A199906656	A199906657
TO D1915...	APPARTAMENTO	A190004524	**NB LOW TENSION CONNECTION	A190004525
			*To modify Appartamento low tension to D1915... to high tension	
			1. Use wiring modification file	
			2. Use pressurestat 16A	
			3. Use control board A199906656	A199906657
FROM D1915...	APPARTAMENTO ECO MODE	A199906656		A199906657
FROM D1915...	APPARTAMENTO NON ECO MODE	A199906656	REMOVE CONTROL BOARD BRIDGE	A199906657